GM SISTEMI - Via dell' Artigianato 421 - 37056 Salizzole (VR) - IT
Tel. e Fax. +39 045 69 00 919 - info@gmelectronics.it

GMTRB00xD-EX

CHARGE DISPLACEMENT PROBE, FOR DUST CONTROL ON SUCTION PLANTS (DUST COLLECTORS) AND AIR TREATMENT SYSTEMS

Instruction manual

GMTRB00xD-EX (version ATEX)
(GMTRB003D-EX, GMTRB005D-EX, GMTRB006D-EX)

Contacts:

website: www.gmsistemi.it
website: www.gmelectronics.it

email: info@gmelectronics.it
areatecnica@gmsistemi.it

Legal notices:

GM SISTEMI - Salizzole (VR) - IT
All rights reserved
Edition: 04.2020
Update: 12.2020

This document may not be reproduced, transmitted or stored in any kind of storage system using any means whatsoever (electronic, photocopying, recording, etc...), unless prior written authorisation is granted by GM SISTEMI ; furthermore the company reserves the right to review this document and to make changes to its contents without having to provide prior communication or notification.

INDEX:

General description 4
Validity and application categories 5
Warnings 6
Plant maintenance 6
Prescriptions of use 7
Principle of operation 8
Self-acquisition 8
Test Procedure 8
StartUP, Outputs status and funcionality, List of Available Version 9
Analog output 4-20mA 9
RS485 output 9
Installation 10
Extensions and adapters for pipes 12
Insulated stylus 12
Triboelectric probes installation with Insulated Stylus 12
Led, Jumper, Button, Terminal block, Connection board layout 14
Enclosure ground connection 15
Electrical connections 16
Additional functions 18
Technical features 19
Maintenance 20
Warnings 20
Calibration declaration 21
Certifications 22
Final test declaration for supplier 23
Final test declaration for purchaser 25

General description

The GMTRB00xD charge displacement probe is a microprocessor instrument, pre-calibrated, complete with two optically isolated digital outputs of the open collector type, an RS485 serial line to configure and / or download data, a 4/20 mA PWM output and a set of LEDs for brief indications of the operating modes.
The probe is designed to detect and measure dust emissions caused by broken bag filters.

WARNING!!

1) Read this instruction manual in all its parts scrupulously before installing or maintaining the equipment in question.
2) The installation and maintenance of the equipment, described here, must be carried out exclusively by qualified personnel such as: electricians, installers, technicians of fire safety systems or industrial automation systems, all qualified.
3) Before proceeding with installation and / or maintenance of the beforementioned equipment, check the ATEX classification both of the area where they will be installed and for accessibility by the technicians in charge of the operations.
4) Perform installations and maintenance of the equipment with the suction systems off.

CONNECTION / DISCONNECTION TERMINALS:

As per paragraph 1.2.6 of the RESS (Essential Health and Safety Requirements), check the following precautionary measures:

The terminal blocks used in this equipment are plug-in type, removable (socket / plug), if you have to operate on these terminal blocks for disconnections and / or changes in the connections, perform these operations only after disconnecting the power supply.

If the equipment is located in an ATEX classified area, the opening of the covers and any operation on the electrical parts in the presence of the power supply is prohibited.

Application validity and categories

This instruction manual is valid for the devices described in it.
Follow the documentation for the other devices on the entire plant.
This manual is addressed to the staff in charge of the operation and interventions for the ordinary and extraordinary maintenance to be carried out on this product.

Symbols used in the manual

Danger
It means that serious or fatal accidents can occur if the relevant protection measures are not observed.

Warning
It means that damage to the product and / or machinery or structures where you are operating may occur if the related protective measures are not observed.

Danger
This symbol indicates safety instructions for protection against electric voltage.

Note
Indicates important information about the product, product usage, and parts of the documentation that you need to pay special attention to.

Security
Basic rules for working safely

Documentation
Always keep documentation at your fingertips.

Drive
The devices must be operated by well-trained personnel at its commissioning.

Regulatory requirements
During the course of any activity, it is necessary to comply with the legal provisions in force in the place of operation, for example those relating to public bodies, or to working areas type ATEX.
The maintainer must follow an operating log in which to report all events that include:

- Commissioning.
- Responsible staff in charge of management.
- Alarms.
- Anomaly.
- Maintenance and repair work.
- Technical changes and expansions.
- Regular maintenance checks on the manufacturer's recommendation.

Stop production

Assembly, maintenance and replacement operations can only be done with the production plant turned off, and mostly, with the fan of dust collectors, switched off.

Job safety

If to do the prescribed activities it is necessary to stand on stairs or work platforms, take all necessary precautions to avoid falling.

Specialised personnel

Assembly, maintenance and assistance work, must only be carried out by trained and qualified expert personnel.

Put in place, final check, start

Commissioning should only be performed by a customer service technician.

Plant maintenance

Operate these systems only if in perfect technical conditions. Fix any malfunctions as soon as they occur. If you are unable to repair the fault yourself, please contact customer service

At least half-yearly maintenance is mandatory performed by a specialized company.
However, shortened maintenance intervals may be necessary due to practical reasons, the environmental conditions present and for variable uses. For assistance, dismantling and checks of the extinguishing system, the company management must appoint an operating personnel manager and his substitute. They must check compliance with the manufacturer's operating and maintenance instructions and regulatory requirements.

After the inspection and maintenance operations, the entire system must be accessible/usable to operating conditions.

Choice of mounting location

Considering the technical conditions, choose the mounting location so that it is accessible for subsequent maintenance work

Explosion protection

The following rules apply to all equipment operating in an atmosphere with risk of dust / gas explosion.

Explosion hazard

- Do not open for any reason the devices in the presence of dust in areas with risk of explosion and in no case make electrical connections in environments with risk of explosion.
- In case of installation and maintenance, the adhesive warning label warns of the danger of moving areas within an area subject to explosion risk. Therefore the indications must be absolutely respected.

- Do not intervene on pipes, filters, silos with the dust extraction system in operation.
- Check, if necessary, the provisions given / indicated by the management of the company or place where you will have to operate.

Intended use

Do not make any changes to the devices.
The manufacturer assumes no responsibility for any damage or operating limitations resulting from these actions.

The manufacturer assumes no responsibility for damage resulting from improper use.

Strict observance to the contents of the instruction manual is also part of the intended use.

Supplementary instructions and explanation of weather conditions

The certificates related do to the 2014/34/UE DIRECTIVE, are valid in general only for the insertion of electrical equipment in atmospheric conditions from 11,38 psi to 16,2 psi (0.8 to 1.1 bar) and from -4°F to 140°F (-20 °C to 60 °C) with air residual that corresponds to the normal oxygen content of the air. If the electrical equipment is inserted outside these atmospheric conditions, important parameters relating to safety technology may change. Possible examples are:

1) Reduction of the minimum ignition energy in the presence of higher temperature or oxygen content.

2) Variation of explosion limits with increased temperature or pressure.

3) The use of the equipment not in the atmospheric conditions indicated by the Directive, cannot therefore be approved. The certification certificate in these cases is only valid as a guideline for the operator, to whom compliance with the remaining workplace safety regulations is recommended. The operator is advised to carry out additional tests for use in special conditions.

The tests, for the devices described in these instructions for use in atmospheres with risk of explosion due to dust, were determined without stratified accumulation of dust and safety distances.
The operator is warned, through the related information sticker, that he is opening the risk zone when he extracts the sparks detection and extinguishing system from the pipes.

Warning!

When the GMTRB00xD, dust probe, is removed, the danger zone opens, therefore, at the end of the interventions, remember to restore the initial conditions.
Check with your safety officer first.
In any case, as previously specified, do not carry out these operations with the suction / ventilation system running.
Switch of the fan, switch off the machinery, grinders, conveyor systems, and so on.

Connection / Interfacing of GMTRB00xD probes with other devices.

For the correct management of the probe data, the connection with GM SISTEMI modules such as: GMPID001, GMPID002, GMVDUST01, GMCU1610SD, etc. is recommended.

Operating principle

The charge displacement probe uses the principle of the displacement of the electric charge in the electrode, induced by the electrical charges, carried by dust immersed in a gaseous fluid.
The amount of electric charge dynamically induced on the electrode is proportional to the amount of dust present in the gaseous fluid.
An increase in the concentration of dust, causes a proportional increase of the signal that reaches the micro-processor.
Applying sophisticated mathematical algorithms, the individual powder particles are counted so as to be able to calculate their concentration in milligrams per cubic meter.
The computed values can be stored internally in order to be drafted in the future, or sent via RS485 serial transmission, or ANALOG 4/20 mA to an external control unit for further analysis and / or views.
NOTE: The 4-20mA ANALOG OUTPUT, is made in PWM Technology.

Self-acquisition (*)

(*) Only for GMTRB003D models

The probe allows two setup modes:
the manual setup foresees the functioning of the thresholds according to a value predefined by the manufacturer or settable on request.
The automatic setup provides for the acquisition of the normal concentration value of the powders in normal operating conditions and in fully automatic mode by pressing the button P1.
Switch J1 defines the type of setup.
Output OUT1 will go ON when 5 times the normal concentration (CN) is exceeded and will represent a pre-alarm, output OUT2 will go ON when 10 times the normal concentration (CN) will be exceeded and will represent an alarm.
N.B. By activating the auto-acquisition, the values (in mg/m^3) of threshold 1 and 2 will no longer correspond to those shown on the table relating to the available versions.
To start the self-acquisition: keep button P1 pressed for 5 seconds, Led L2 will turn on steady (mode "b"), then wait for the LED to turn off after about 4 minutes, at this point the acquisition will be finished and the values will be stored in a non-volatile memory, which will keep them even if the probe is disconnected.
N.B. the values acquired are for the probe, the reference for activating the outputs, therefore they are intended as operating values with "regular" dust discharge, therefore it is recommended to carry out the self-acquisition by choosing the moment deemed most appropriate during processing.
If you want to store new values (e.g. for changes in working conditions), carry out a new auto-acquisition by pressing P1 as previously described.

Test procedure (depends on software release)

To test the proper operation of the probe, connect pin 3 (test input) to pin 2 (negative power), for a longer time than 0.5 sec. The led relating to fault threshold (LED 4) and the system will start a procedure for the verification of the proper functioning of the entire probe.
Will be verified with all the circuits and all the amplification stages of input, including the presence of leakage current on the electrode.
Two cases can occur:

1. after about 30 sec. from the start of the test, the fault output U3 will be activated for about 60 seconds. This is the condition of failure the test.

2. after about 90 seconds. from the start of test, the fault output U3 is not activated. This is the condition of passing the test.

In any case, after about 90 seconds. from the start of test, the probe will resume the normal operation mode regardless of the result of the test.
In case of failure of the test, it is recommended to remove the probe and provide a careful cleaning of the electrode and the insulator, so you should also check for the presence of water infiltration.
Next, replace the probe and repeat the test.

StartUP

After powering up the probe and verified the green LED L1, it is necessary to wait for a warm-up time of 3 minutes, during which the probe is measuring but the outputs are disabled.
After this period of time, if the jumper J1 (see drawing) is left off, the probe will work with the factory pre-set thresholds (SEE TABLE). This mode of operation is called "manual" and is present only for the probes GM-TRB003D.
If the jumper J1 (see drawing) is inserted, the probe will work with thresholds set automatically. In this condition, the probe will wait for the press of the button P1, this state will be indicated by the LED L2 mode "A" that is slowly blinking.

OUTPUTS STATUS AND FUNCTIONALITY

Status

Output 1 (output U1 ON) = exceeded during the normal measure of the factory value (see table) or the self acquired multiplied 5 times (multiplication factor x 5).
Output 2 (output U2 ON) = exceeded during the normal measure of the factory value (see table) or the self acquired multiplied 10 times (multiplication factor x 10).
Fault (output U3 ON) = failed the test operation, triggered by a negative pulse (min 0.5 sec.) on pin 3 (Test Input): If pin 3 is connected to a short time to pin 2 (Negative Power Supply) is automatically activated the test procedure that verifies the proper operation of the entire probe.
The lack of activation of the output U3 and its LED L4 indicate proper operation of the probe and passing the test.

Outputs

U1 (pin 7) Normally open output with J2 opened; normally closed with J2 closed.
U2 (pin 8) Normally open output with J2 opened; normally closed with J2 closed.
U3 (pin 9) Normally open output with J2 opened; normally closed with J2 closed.

LIST OF AVAILABLE VERSIONS

MODEL	RESOLUTION	THRESHOLD 1	THRESHOLD 2	OUTPUT 4-20mA	Full-scale @ 20mA	Self-Acquisition	RS485
GMTRB003D	0,1 mg/m3	5 mg/m3	10 mg/m3	NO	10/50 mg/m3	YES	YES
GMTRB005D	0,1 mg/m3	5 mg/m3	10 mg/m3	YES	10/50 mg/m3	NO	YES
GMTRB006D	0,01 mg/m3	1 mg/m3	2 mg/m3	YES	2/10 mg/m3	NO	YES

NOTE: The codes with "H" suffix means, high temperature version (e.g. GMTRB003D-H-EX)
The codes with "IS" suffix means, stylus insulated version (e.g. GMTRB003D-EX-ISxx, xx are the range about the length of the stylus).

ANALOG OUTPUT 4/20 mA(*)

(*) Only for GMTRB005D and GMTRB006D models
The switch J1 defines the type of the range ONLY for the ANALOG output 4/20 mA.
With J1 open, the full scale value (20 mA) will be achieved with a dust concentration of 2 mg/m3 (probes GMTRB006D) or equal to 10 mg/m3 (probes GMTRB005D).
With J1 closed, the full scale value (20 mA) will be achieved with a dust concentration of 10 mg/m3 (probes GMTRB006D) or 50 mg/m3 (probes GMTRB005D).

SERIAL OUTPUT RS485 (*)

(*) Probes GMTRB003D, GMTRB005D, GMTRB006D models.
The RS485 serial interface allows the transfer of data between the GMTRB00xD and other equipment GM ELECTRONICS (eg. GMPID001, GMPID002, GMVDUST, GMCU1610SD).

Installation

The triboelectric probe must be installed on a metallic duct electrically connected to the ground, so as to ensure shielding from electromagnetic noise.
The distance from obstacles that may disturb the laminar flow of air (valves, bottlenecks, bends etc..) And change the uniform concentration of dust, both upstream and downstream of the probe is at least 5 times the diameter of the pipe, about it see the following figure.

N.B.: installation of the probe should be at a slight angle so as to prevent possible stagnant liquid on the electrode or on the insulation of the electrode.
Refer to "duct fixing Fig. B" (on this figure, the inclination is represented excessively than necessary, for reasons of clarity).

OPTIONAL: 3-piece joint
to facilitate disassembly / reassembly of probe
(e.g. for maintenance)

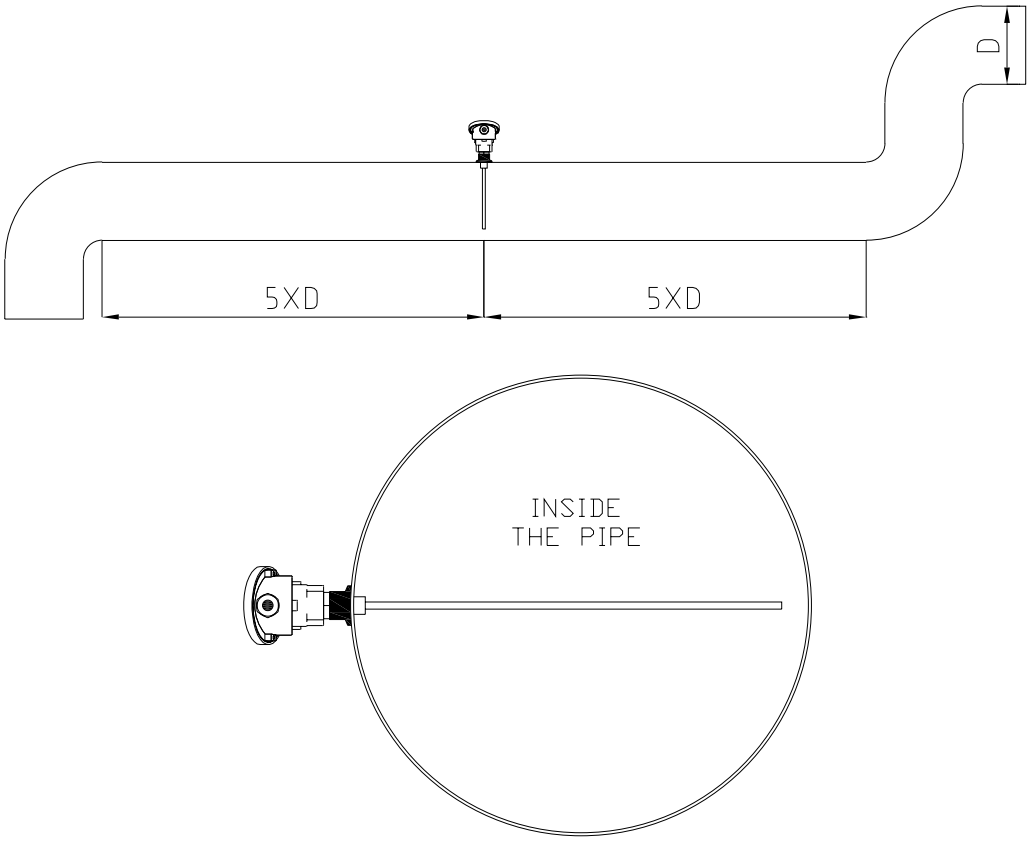

For proper measurement of powders, the measuring electrode of the probe must exceed ¾ of the diameter of the pipe.
In order to minimize any dust deposits on the electrode, is not recommended mounting the probe with the enclosure underneath the pipeline.
The electrode must have a length slightly less than the diameter of the pipe it must not touch the pipe or other metal objects and / or blocking.
Please note, that the quality of the signal is always proportional to the amount of air / powder mixture that invests the electrode.
After determining the location of the installation, screw the probe into the conduct, by interposing an adapter ¾" G and without force.

follows: Installation

FIXING ON HORIZONTAL DUCT (FIG. A)

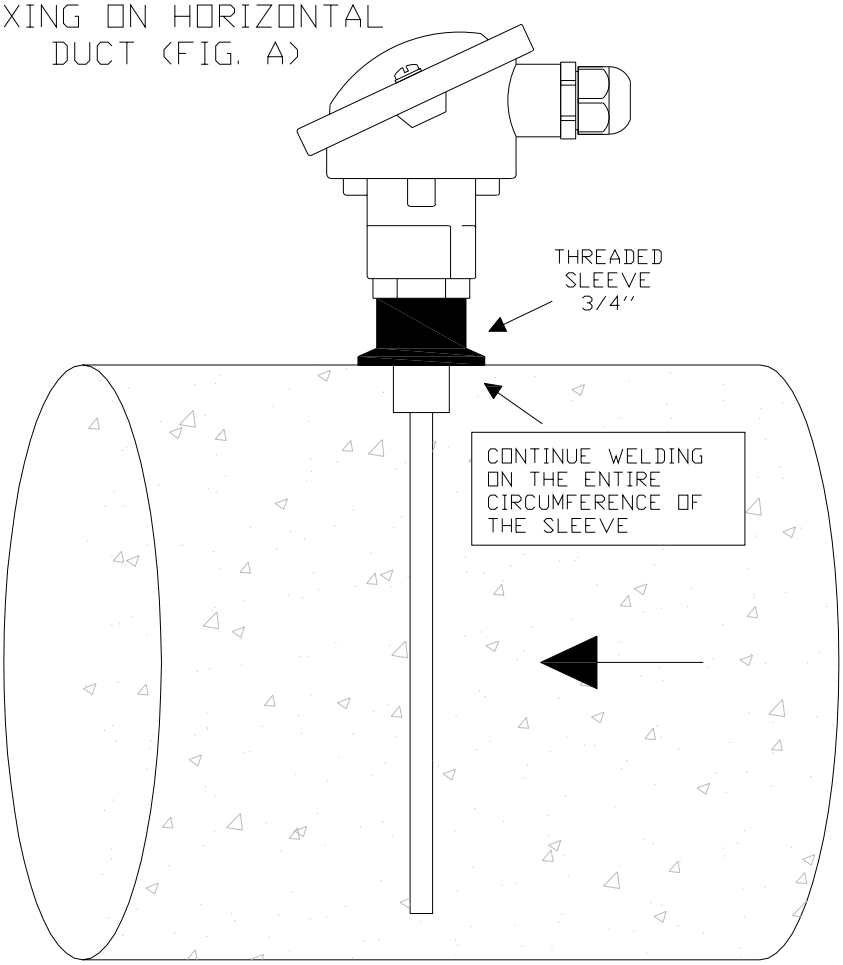

FIXING ON VERTICAL DUCT (FIG. B)

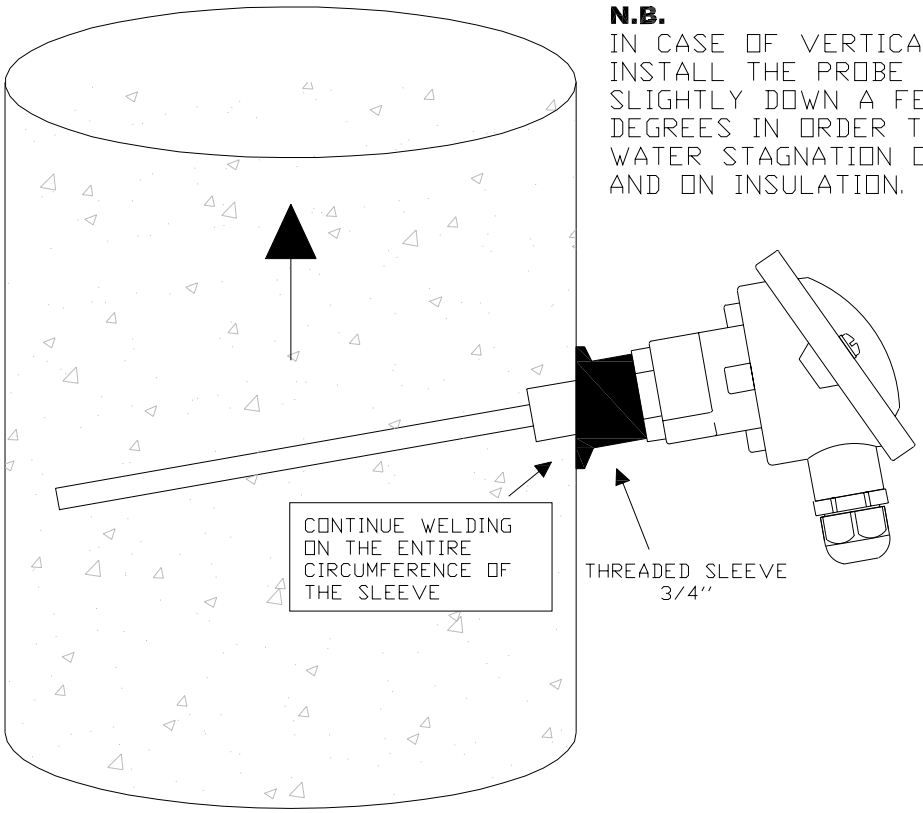

N.B.
IN CASE OF VERTICAL DUCT, INSTALL THE PROBE ANGLE SLIGHTLY DOWN A FEW DEGREES IN ORDER TO AVOID ANY WATER STAGNATION ON THE ELECTRODE AND ON INSULATION.

ACCESSORIES: extensions and adaptations for electrode for installation on pipelines of various diameters

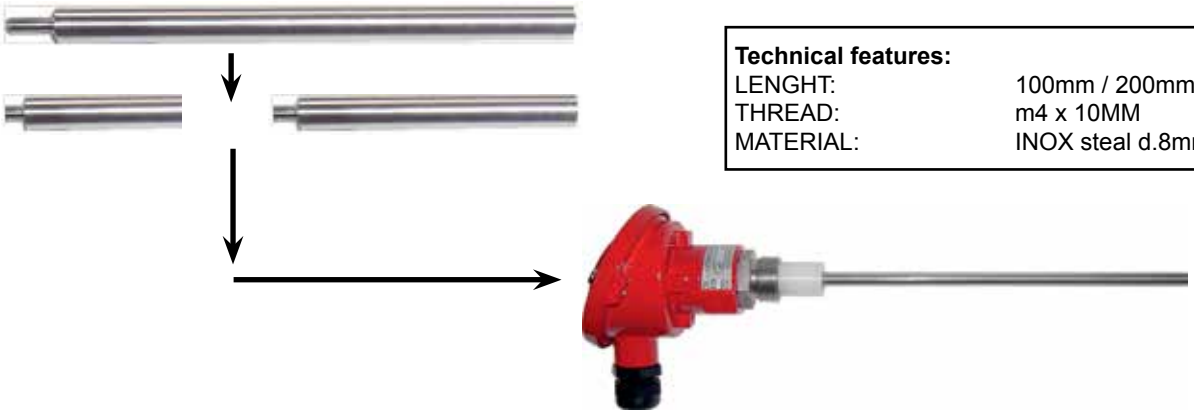

Technical features:

LENGHT:	100mm / 200mm / 400mm
THREAD:	m4 x 10MM
MATERIAL:	INOX steal d.8mm

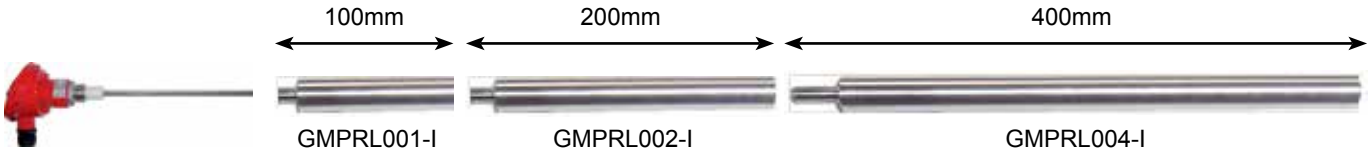

ACCESSORIES: insulated stylus

In the case of aspiration systems where there may be together with the flow, a high concentration of humidity, steam, or other wet conditions, or even the entry of rain from the chimney, the probe may be affected by the measurement, and therefore returns completely incorrect values beyond than to activate the outputs because the thresholds are falsely exceeded. To solve these problems, all the probes can be supplied with the measuring stylus completely insulated in Teflon, in this case the stylus is made (on order) in a single piece without joints, avoiding the entry towards the metal part of the stylus of " wet pollutants ".

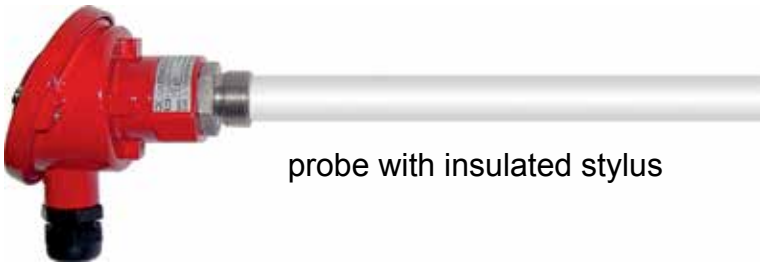

probe with insulated stylus

Note1: The length of the probe with insulated stylus, is made according with the diameter of the duct chimney (customized).

Note2: Specification about ordering code: to order the probes with insulated stylus in the code will be added the : "IS01" or "IS02" or "IS03" or "IS04" suffix.
For example "IS03" = Range from 650 to 900 mm length stylus.

TRIBOELECTRIC PROBES INSTALLATION WITH INSULATED STYLUS

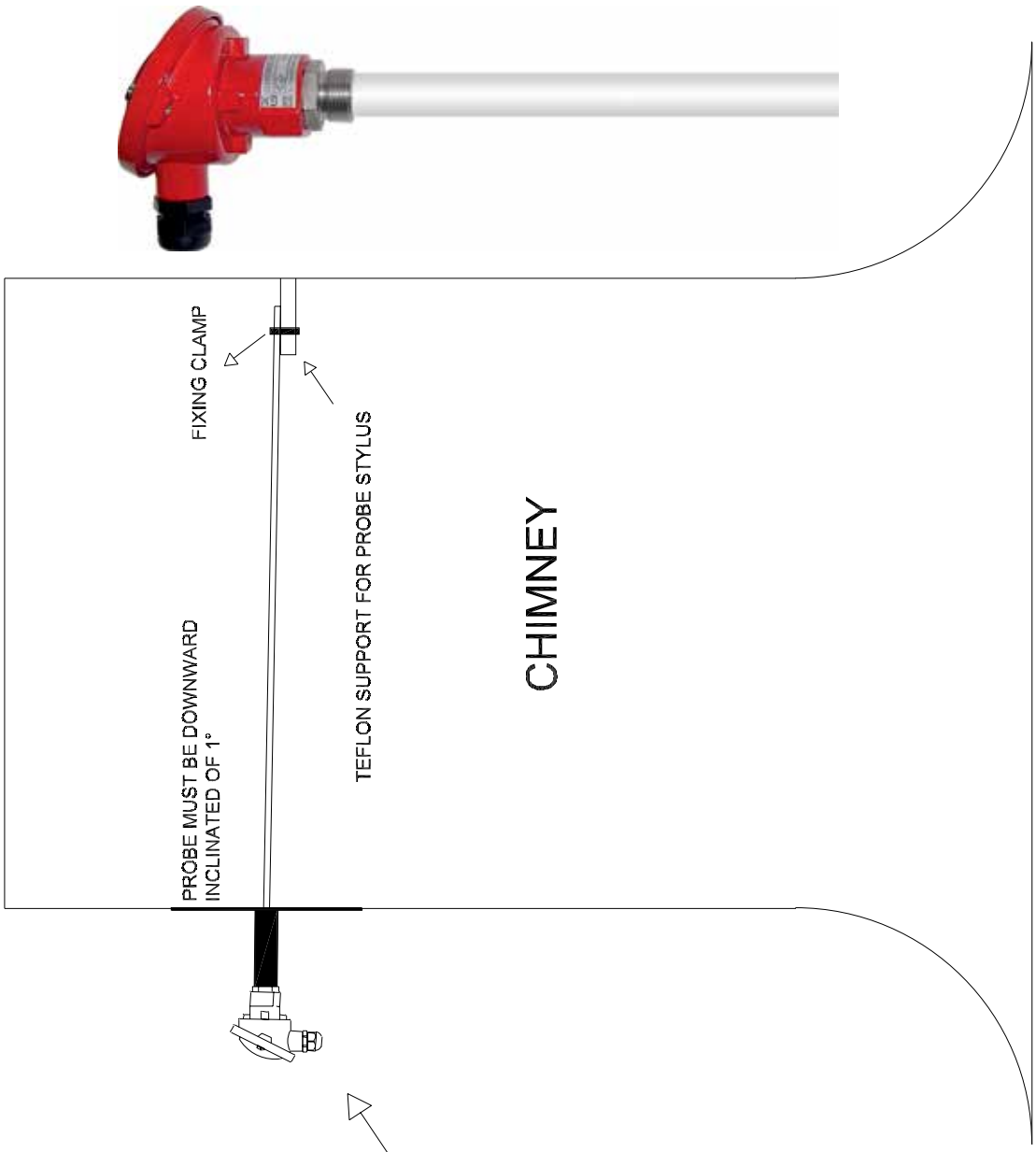

VERSIONS OF PROBE PROVIDED WITH ISOLATED MEASURING ELECTRODE HAS A GREATER WEIGHT AND BECAUSE IS NORMALLY INSTALLED ON PIPES / CHIMNEYS WHERE TRANSIT HIGH SPEED FLOW, IT IS RECOMMENDED FIXING ON A SUPPORT AS EG. NEXT, TO AVOID PROBE DAMAGE OR BROKEN.

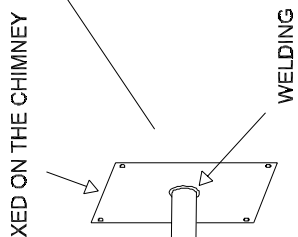

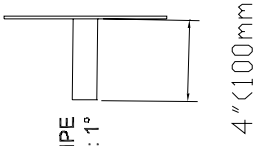

LED , JUMPER , PULSANTE , MORSETTIERA, LAYOUT SCHEDA COLLEGAMENTI

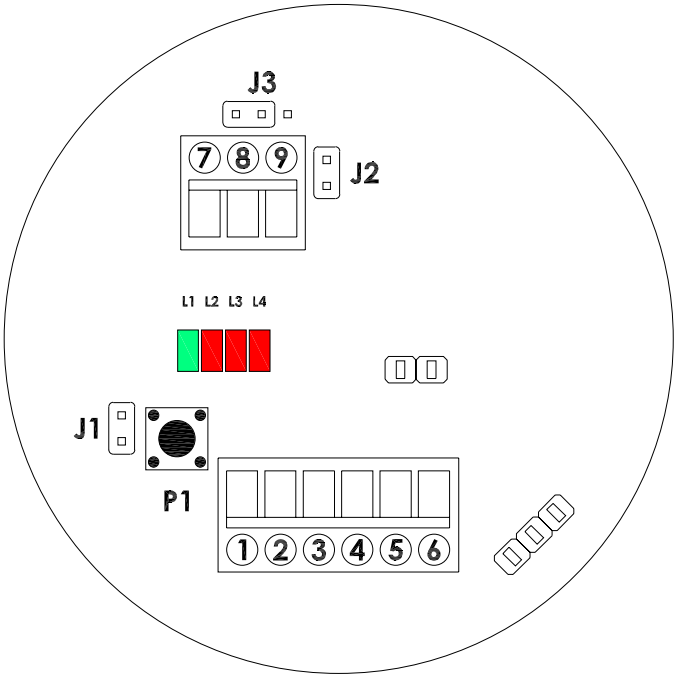

LED DESCRIPTION:
L1: ON = +V tensioni s present.
L2: ON = warm up / self-acquisition / serial switching
L3: ON = output U1 ON (pin 7)
L4: ON = output U2 ON (pin 8)
L2 +L3 : flashing = probe vitality (probe ON)
L2: irregular flashing = serial connection activated.

JUMPERS DESCRIPTION:

J1: Probes GMTRB003D.
open = output U1 threshold 5mg / m3, output U2 threshold 10mg / m3
closed = U1 and U2 thresholds set by "Auto-acquisition" (see paragraph)

Operating range for 4/20 mA analog output only.
probes GMTRB006D: J1 open = full scale (20 mA) at 2 mg/m3
J1 closed = full scale (20 mA) at 10 mg/m3

probes GMTRB005D: J1 open = full scale (20 mA) at 10 mg/m3
J1 closed = full scale (20 mA) at 50 mg/m3.

J2: inversion of outputs logic.
With J2 open, output contacts (solid state relay) normally open,
With J2 closed, output contacts(solid state relay) normally closed

J3: setting common about U1 and U2 to the positive / negative (see connection example 1)

BUTTON DESCRIPTION:

P1 : button to self-acquisition (if provided).

TERMINALS DESCRIPTION:

1 = POSITIVE SUPPLY	2 = NEGATIVE SUPPLY	3 = TEST INPUT
4 = SERIAL RS485 (A)	5 = SERIAL RS485 (B)	6 = OUTPUT PWM 4/20 mA
7 = OUTPUT THRESHOLD U1	8 = OUTPUT THRESHOLD U2	9 = FAULT OUTPUT U3

CONNECTION / DISCONNECTION TERMINALS:

As per paragraph 1.2.6 of the RESS (Essential Health and Safety Requirements), check the following precautionary measures:

The terminal blocks used in this equipment are plug-in type, removable (socket / plug), if you have to operate on these terminal blocks for disconnections and / or changes in the connections, perform these operations only after disconnecting the power supply.

If the equipment is located in an ATEX classified area, the opening of the covers and any operation on the electrical parts in the presence of the power supply is prohibited.

ELECTICAL CONNECTIONS
EARTH-ENCLOSURE CONNECTION NEEDED -> CABLE INCLUDED IN THE COVER

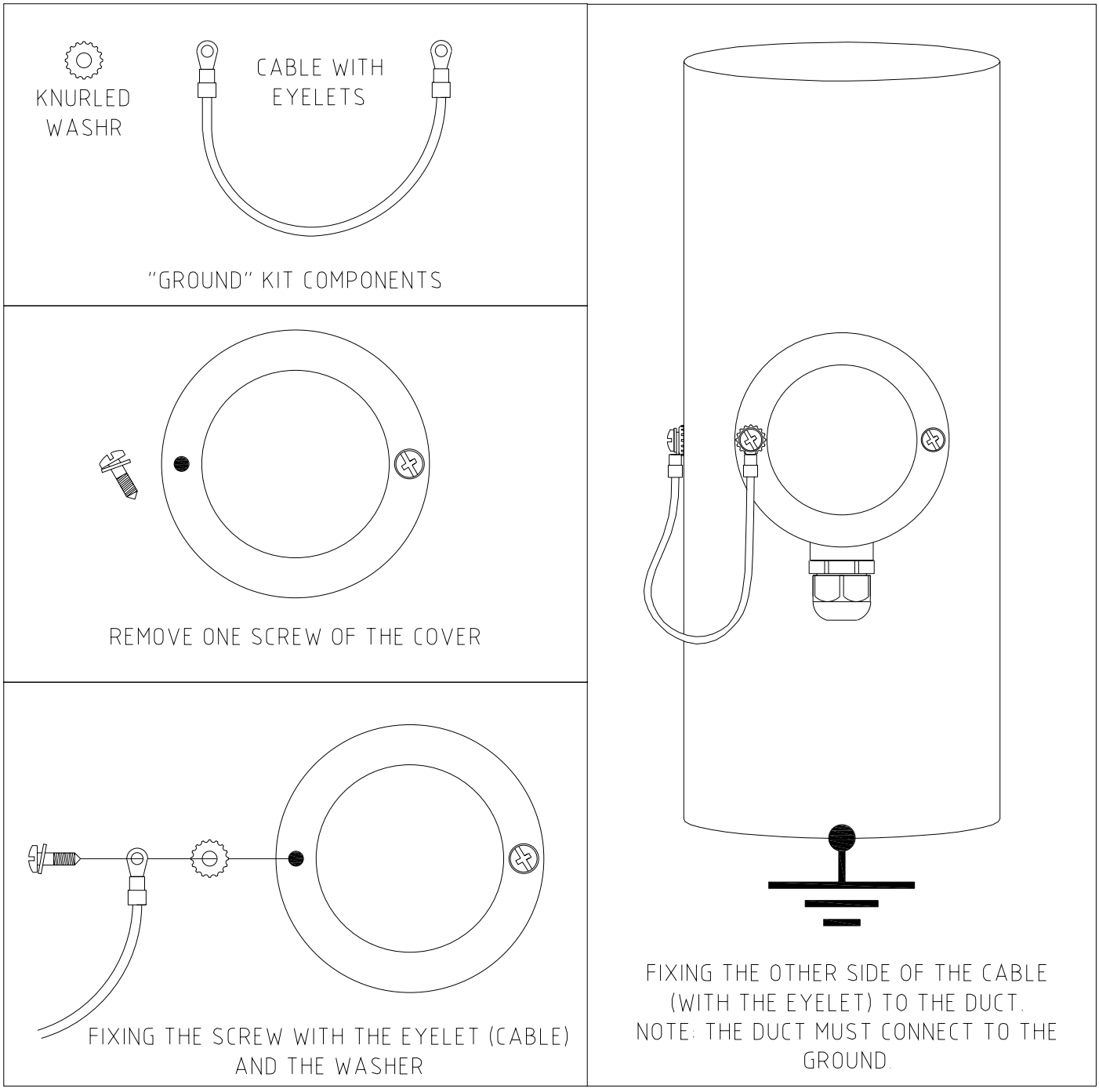

Electrical connections

The probe GMTRB00xD must be supplied with a voltage between 20 and 30V DC.
The opto-isolated open collector outputs (protected by a resettable fuse) accept a maximum voltage of 48 VAC and a maximum current of 100 mA. The current output PWM 4/20 mA is completely optically isolated. The probe is electrically isolated from the power supply.

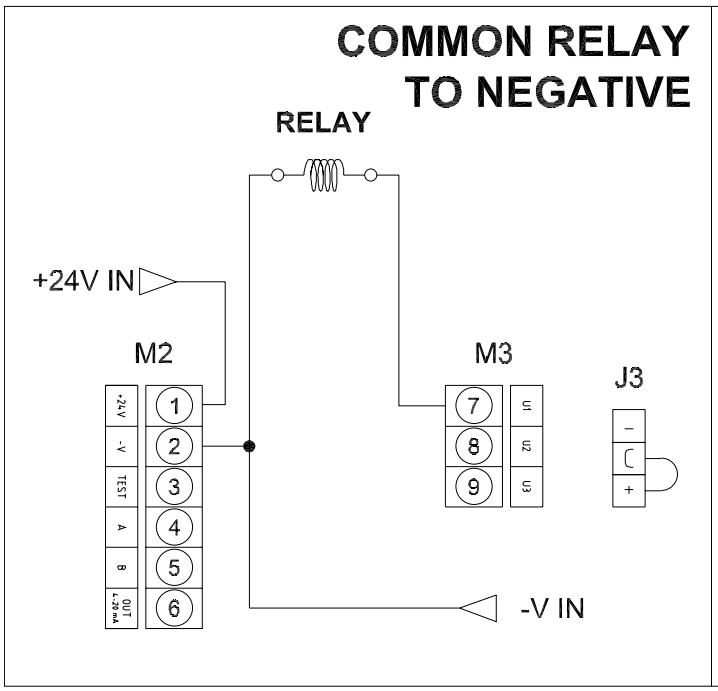

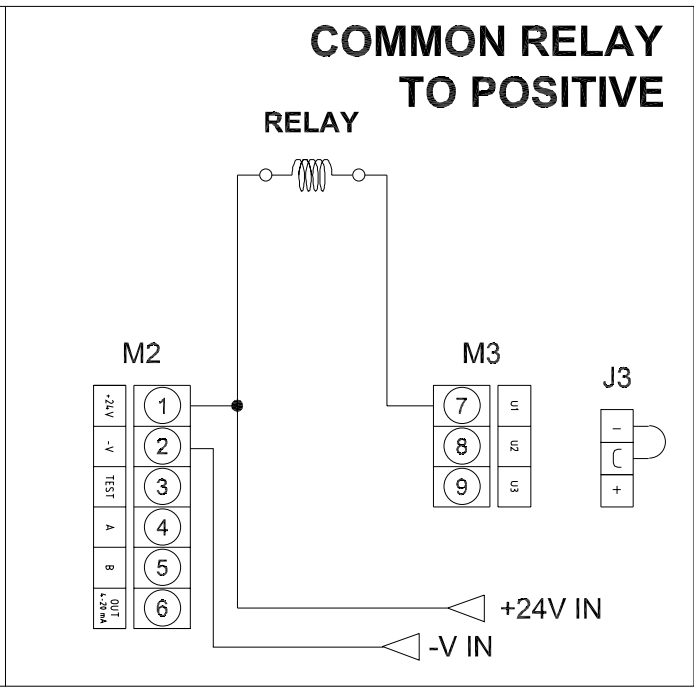

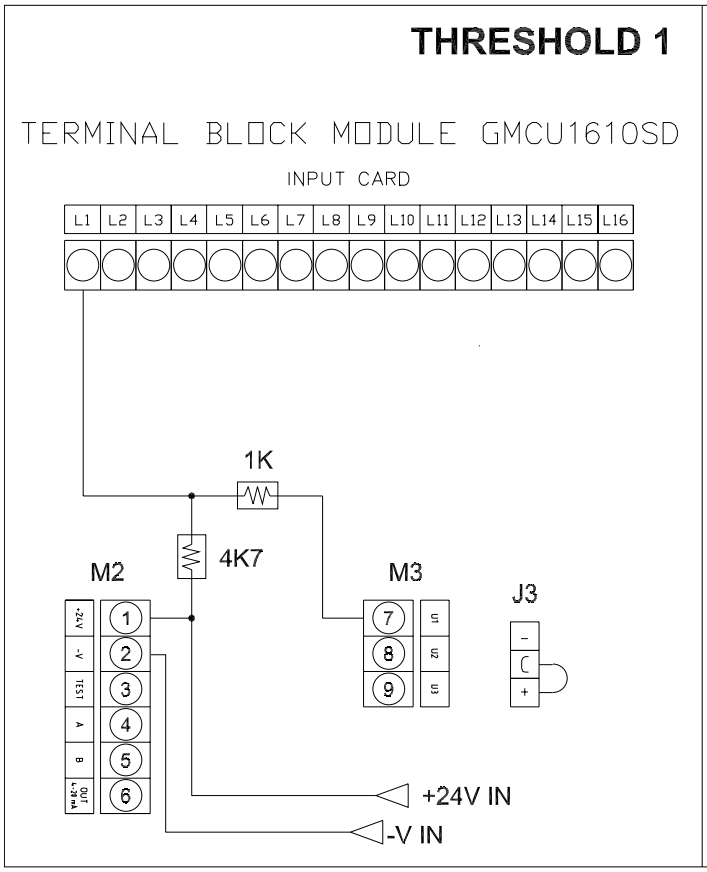

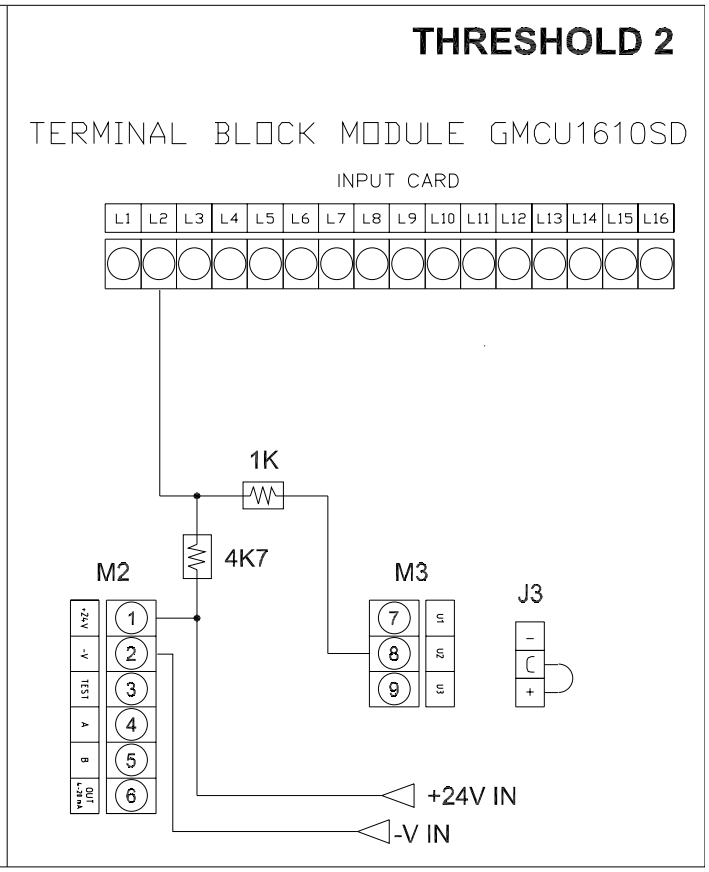

EXIT 4/20 mA CONNECTION EXAMPLE

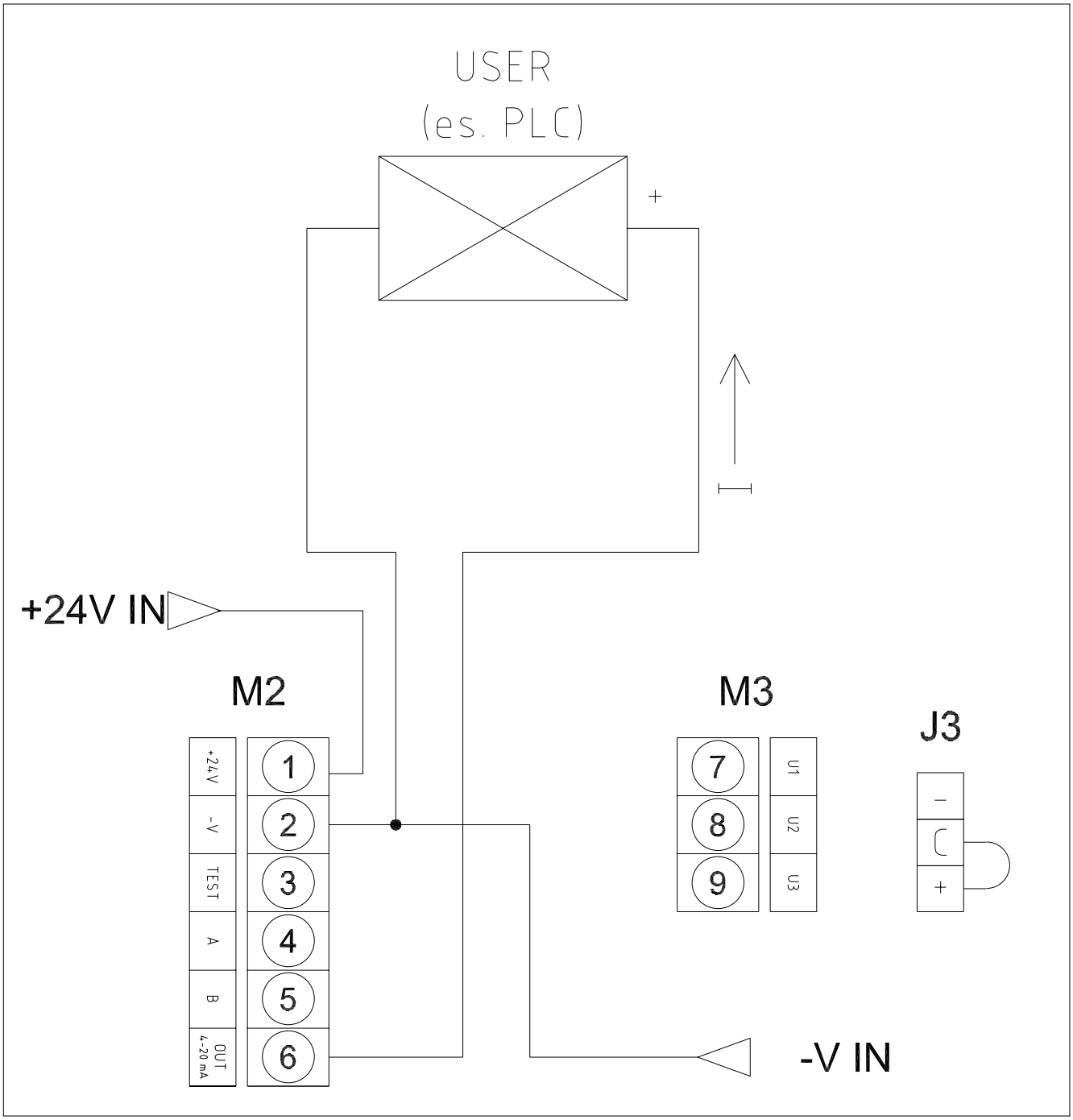

ADDITIONAL FUNCTIONS - DATA ANALYSIS

The presence of the serial output RS485 can transfer to an external unit the values read by the probe. (only probes GMRTB003D, GMTRB005D and GMTRB006D)
In the chart below, shows a typical example of display (via the Excel program) of the variation of concentration of the powder as a function of time.
In abscissa there is the time variable (seconds), while in the ordinate is placed the induced current from the charges carried by the gaseous fluid, or, alternatively, and after a calibration procedure on the system, the value of the concentration of dust in mg/m3 .
Because processing of the data is performed mathematically by the internal microprocessor, it is possible, through the serial line to enter any type of functional analysis.
In the example you can see the response of the probe to changes in the coefficient of a CF exponential filter. when CF increases, the microprocessor will eliminate the points derivative of greater, reaching the expected value.
CF with elevated the probe will act as optimally detector threshold, while lower with CF will be preferred operation the analytical
The regulator GMPID001 is also fully compatible with the probe GMTRB00xD, allowing a complete and automatic management of the whole system.

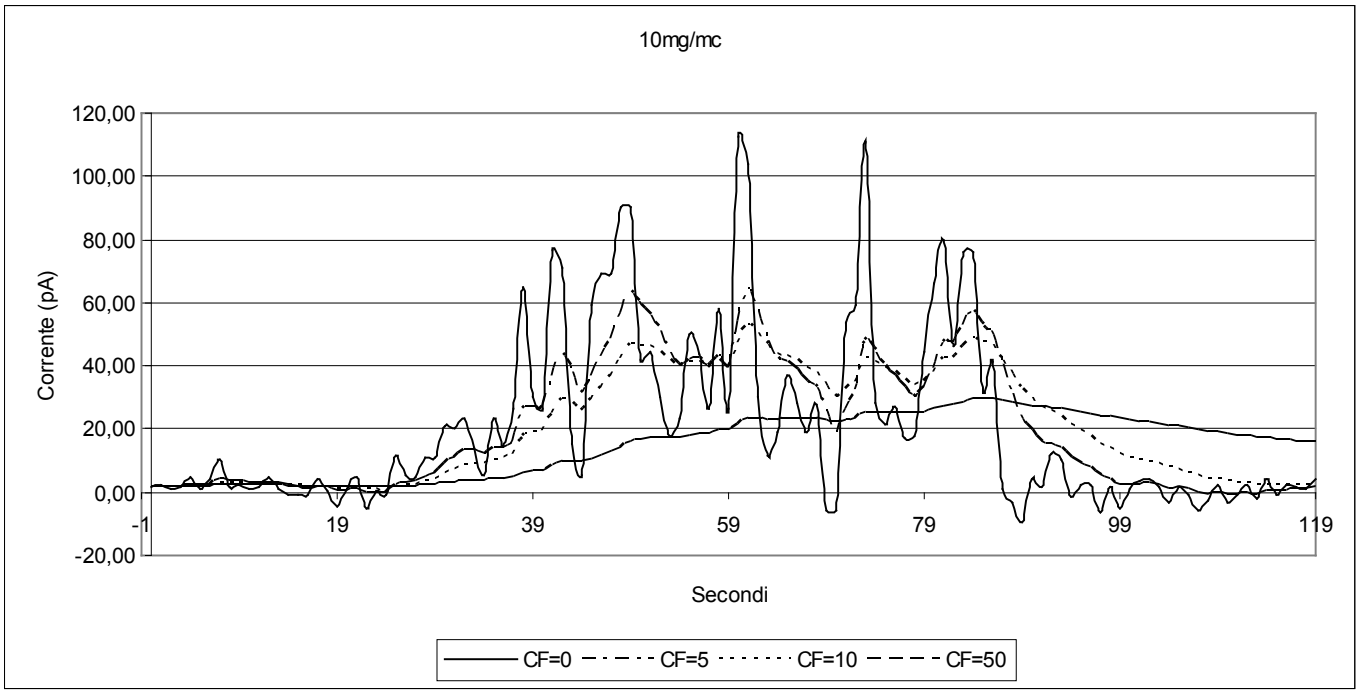

CONTROL MODULES (VIEWERS, REGULATORS) GM INTERFACEABLE

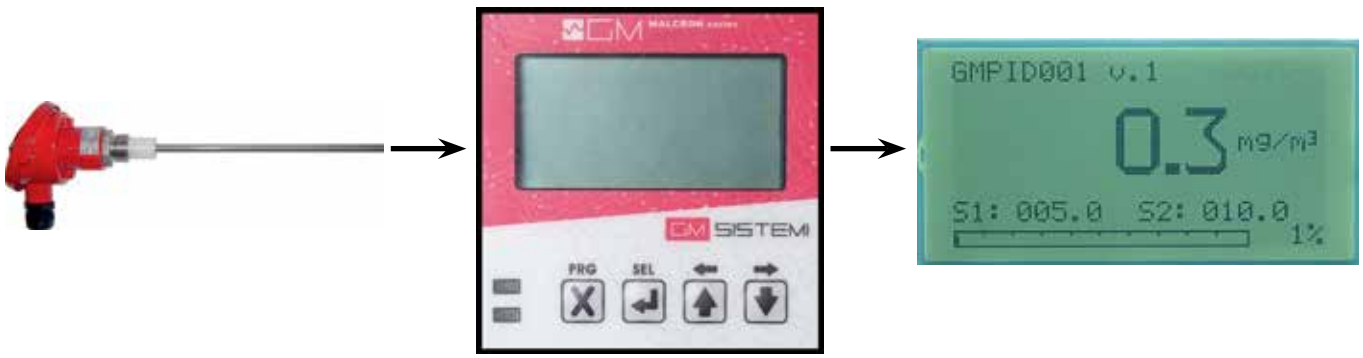

TECHNICAL FEATURES

Supply	20 / 30 Vdc
Max power consumption	1W
Resolution	0,01 mg/m3 (see versions tab)
Range set	Automatic/manual
Dust particles dimension	> of 0,3 µm
Type of measurable materials	Dust particles in gaseous fluid
Flow speed	> di 4 m/s
Measuring principle	Charge displacement
Alarm threshold 1	See the tab of available versions
Alarm threshold 2	See the tab of available versions
Alarm threshold3 (Fault)	Automatically activated by automatic test function
Output type	N.3 optoisolated outputs with solid state relay, protected with resettable fuses
Max outputs current	100 mA
Max tension applicable on outputs	48 V
Output function	Settable to normally open or normally closed. Common to positive or negative (see connection samples)
Working temperature	< 140ºC (standard version e.g. GMTRB003D-EX) up to 220 °C "-H" version (e.g. GMTRB003D-H-EX)
Working pressure of the probe	< 2 bar
Electrode material	Inox steel 304
Enclosure material	Aluminium
Humidiy	< 95% non-condensing
Working temperature for elecronic parts	-20 / +65ºC
Dimensions	DIN A
Measurable elements	All non-aggressive gasses
Electrical connection	1 terminal with 3 poles + 1 terminal with 6 poles
Mechanical fixing	3/4" G
Protection degree	IP 65
Display	n. 4 led
PWM 4/20 mA output	Activated output, optoisolated. Max load 500 ohm
Serial output	RS485 2 wires
Certifications	See certifications page

Maintenance

Periodically, depending on the type of plant and therefore the type of expulsions, both as a quantity that as size (wet material, sticky, etc.). Verify the status of the stylus / electrode of the probe, if there are accumulations of dirt and / or condensation between the electrode and the metal mount (nipple) to the container, which could offset measurements. perform at least one inspection every 4-6 months.

Probe cleaning

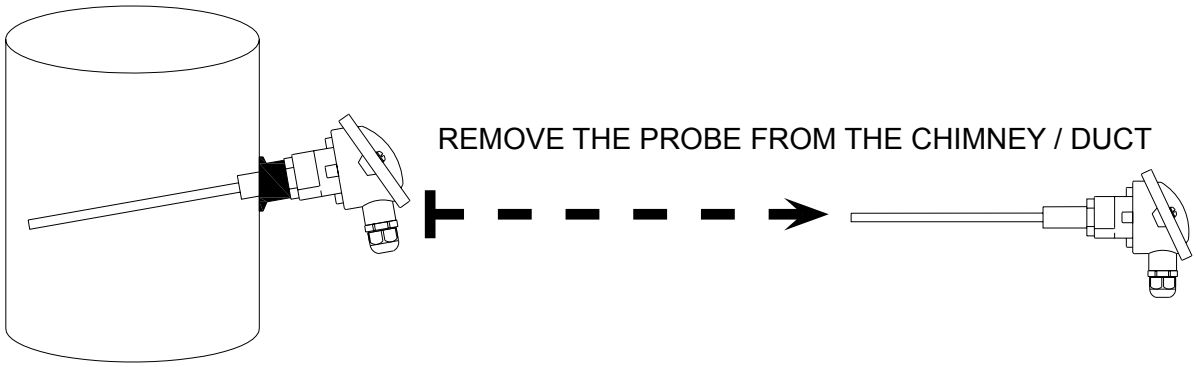

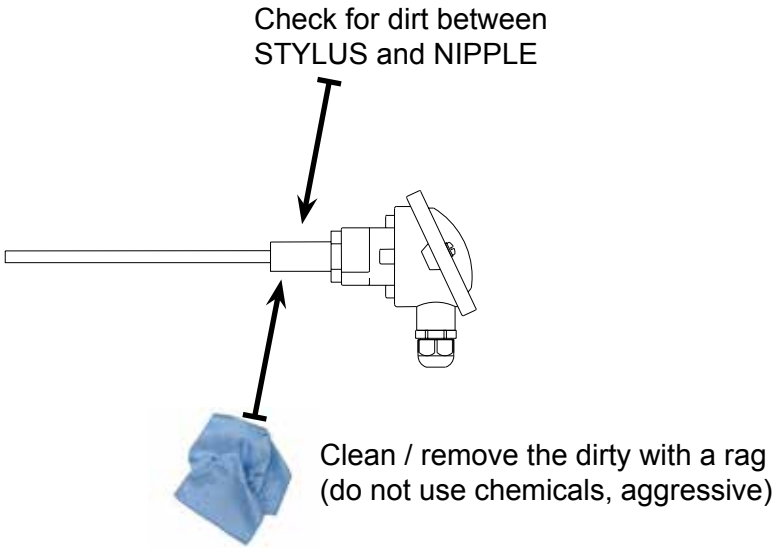

Warnings

- The use of the probe is allowed only in modes described in this manual
- Follow the instructions in this manual literally before installation or servicing
- The installation and maintenance of the probe should be performed only by qualified personnel
- GM SISTEMI reserves the right to make changes to the present manual without notice

TRIBOELECTRIC PROBES CALIBRATION DECLARATION

Each GMTRB00xD probe (GMTRB003, GMTRB005, GMTRB006) is calibrated by means of a simulation system of dust concentration according to the UNI EN 13284-1: 2003 method - Emissions from fixed source - Determination of the mass concentration of dust in low concentrations - Manual gravimetric method .
Compensations for changes in fluid velocity are processed with a suitable mathematical model, directly by the microprocessor on board the probe.
Compensations relating to the electrostatic type of powders are determined statistically in the model.

N.B.:
Since the systems, on which the probes are installed, can differ greatly in terms of length of the pipes, diameter of the pipes, air speed, nature and particle size of the powders, degree of turbulence of the air, relative humidity and chemical composition of the air, GM SISTEMI always recommends performing a gravimetric test before installation and, in any case, at least once a year, in order to confirm correct operation or perform a simple software re-calibration to adapt them to the system.

Salizzole (VR), 06/2020

GM SISTEMI

Certifications

ATEX

GM SISTEMI declares that this product:

GMTRB00xD

It meets the essential requirements of the directive:

ATEX 2014/34/UE

And it is therefore marked: **II 3GD Ex mc tc IIIC T85°C Dc**
Ex mc nA IIC T6 Gc
Tamb: -20 to +65°C

Harmonized standards used for achieve compliance:
IEC 60079-31, IEC 60079-15, IEC 60079-18

Salizzole (VR), July/2020

GM SISTEMI
Legale rappresentante
Guarnieri Massimo

DECLARATION OF CONFORMITY

GM SISTEMI di Guarnieri Massimo
based in Via dell'Artigianato 421 SALIZZOLE (VR)
tel. & Fax 045-6900919

DECLARE
UNDER OUR LIABILITY THAT THE PRODUCT:

GMTRB00xD-EX
(GMTRB003-EX – GMTRB005-EX – GMTRB006-EX)
(GMTRB003-H-EX – GMTRB005-H-EX – GMTRB006-H-EX)
DUST DETECTOR

To which this declaration refers

IS COMPLIANT
and therefore meets the essential requirements of the directives :
EC Electromagnetic Compatibility Directive 2014/30/EU
***EC Low Voltage Directive 2014/35/EU**
(* Only for devices installed in non-ATEX areas)

Salizzole (VR), July/2020

GM SISTEMI
Legal Representative
Guarnieri Massimo

Cut along the dotted line and return to the manufacturer.

Correct installation document and final test for the manufacturer

Buyer company

Company where the equipment is installed

Order N° **date**

Delivery date **Document N°**

Plant description	
List of GM SISTEMI equipment installed	

Installed by (company): **date**

executor of the test: **date**

Representing user company:

People present to the test :

After installing and testing the end is declared :

- **The correct installation of all equipment;**
- **The perfect functioning of the plant and all equipment;**
- **The installation company has provided all the necessary information to make the correct use and proper operation and maintenance;**
- **The user has received the operation and maintenance manual (original).**

For Buyer Company	For final customer	For installation company

This document is valid only if it's completely filled and signed.
Copy for the installer to be sent to the Manufacturer (or to the official distributor).

The buyer and the installer, compilers of this document, authorize the manufacturer of the machine to process data entered here, for the part that concerns the management of the guarantee and product traceability, pursuant to Legislative Decree 196 / 2003 "Code on the security of personal data" (Privacy).

FREE SIDE FOR PRINTING THE CORRECT
INSTALLATION AND FINAL TEST REPORT

Correct installation document and final test for the buyer

Buyer company

Company where the equipment is installed

Order N. **date**

Delivery date **Document N.**

Plant description	
List of GM SISTEMI equipment installed	

Installation by (company): **date**

Executor of the test: **date**

Representing user company :

People present to the test :

After installing and testing the end is declared :

- **The correct installation of all equipment;**
- **The perfect functioning of the plant and all equipment;**
- **The installation company has provided all the necessary information to make the correct use and proper operation and maintenance;**
- **The user has received the operation and maintenance manual (original).**

For Buyer Company	For final customer	For installation company

This document is valid only if it's completely filled and signed.
Copy for buyer to leave attached at the using manual.

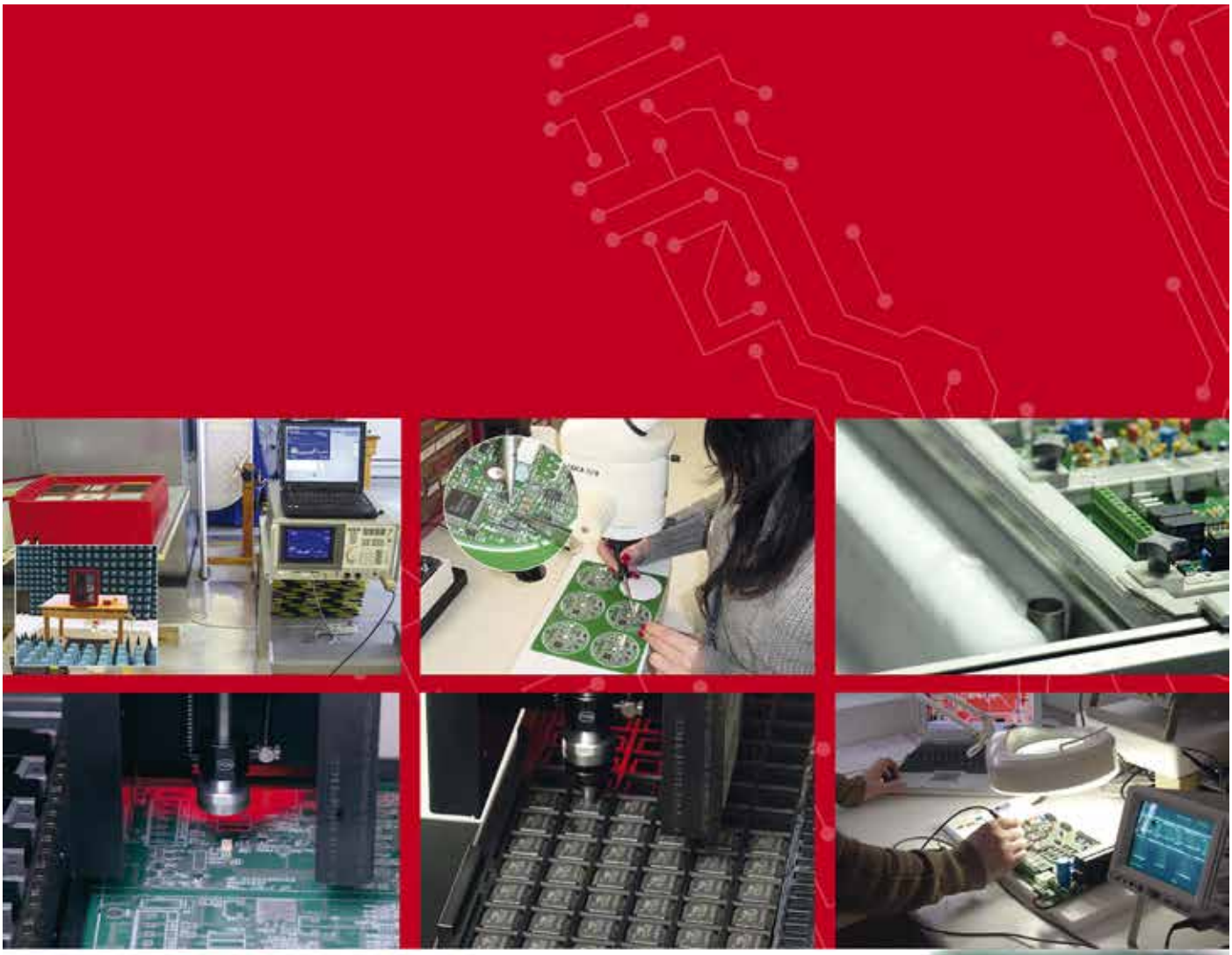

SISTEMI E APPARATI ELETTRONICI: FLESSIBILITA', AUTONOMIA PROGETTUALE & PRODUTTIVA, RICERCA E SVILUPPO COSTANTI, SONO DA SEMPRE LA FILOSOFIA AZIENDALE DELLA GM SISTEMI

SYSTEMS AND ELECTRONIC DEVICES: FLEXIBILITY, AUTONOMY ENGINEERING & PRODUCTIVE, RESEARCH AND DEVELOPMENT CONSTANT, ARE FOR A LONG TIME, THE PHILOSOPHY OF THE "GM SISTEMI" COMPANY

GM SISTEMI

GM SISTEMI
Via dell'Artigianato 421 - 37056 Salizzole (VR) Italy
Tel. e fax +39 045 69 00 919

info@gmelectronics.it
www.gmelectronics.it